Cambridge Assessment International Education

Cambridge IGCSE™

CANDIDATE NAME	

CENTRE NUMBER						CANDIDATE NUMBER				

8351188073

DESIGN & TECHNOLOGY **0445/33**

Paper 3 Resistant Materials **October/November 2023**

1 hour

You must answer on the question paper.

No additional materials are needed.

INSTRUCTIONS

- Section A: answer **all** questions.
- Section B: answer **one** question.
- Use a black or dark blue pen. You may use an HB pencil for any diagrams or graphs.
- Write your name, centre number and candidate number in the boxes at the top of the page.
- Answer in the space provided.
- Do **not** use an erasable pen or correction fluid.
- Do **not** write on any bar codes.
- You may use a calculator.

INFORMATION

- The total mark for this paper is 50.
- The number of marks for each question or part question is shown in brackets [ ].
- All dimensions are in millimetres.

This document has **24** pages. Any blank pages are indicated.

DC (LK/CB) 317576/2
© UCLES 2023

Section A

Answer **all** questions in this section.

1 Fig. 1.1 shows a student using a pillar drill.

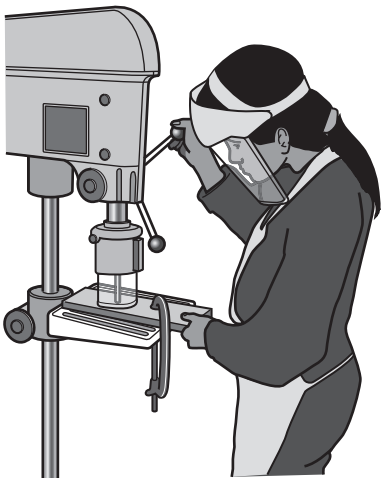

Fig. 1.1

Identify **three** safe working practices when using a pillar drill.

1 .....

2 .....

3 .....
[3]

2 Fig. 2.1 shows a length of wood being planed in two directions, **A** and **B**.

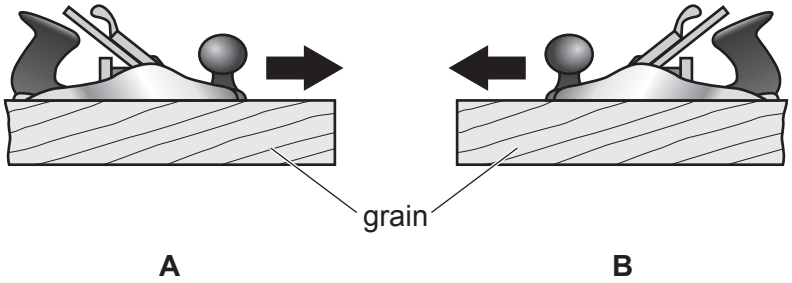

Fig. 2.1

(a) State the name of the plane shown in Fig. 2.1.

..... [1]

(b) State which direction of planing, **A** or **B**, would produce the smoother surface.

..... [1]

3 Fig. 3.1 shows details of a tabletop that will be fastened to the rails of a small table.

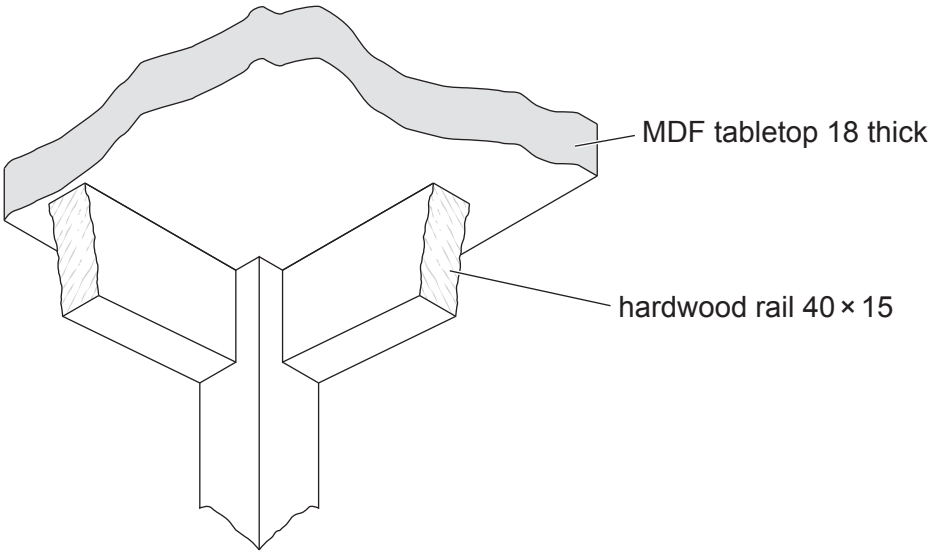

Fig. 3.1

Draw on Fig. 3.1 to show how the tabletop could be fastened to the rails. [3]

4 Table 4.1 shows three products each made of a different plastic.
Complete Table 4.1 by naming a suitable specific plastic that could be used for each product.

Table 4.1

Product	Specific name of plastic
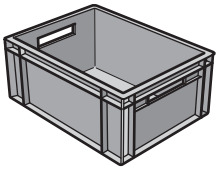 crate	
electrical switch	
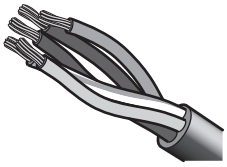 electrical insulation	

[3]

5 Complete the sentence below by selecting the correct term from the list.

sustainability **generation of ideas** **research** **quality control**

During manufacture, a product is required to meet specific standards and requirements.

Monitoring these standards is known as ..... [1]

6 Fig. 6.1 shows the centre for a drilled hole marked out on 6 mm thick metal.

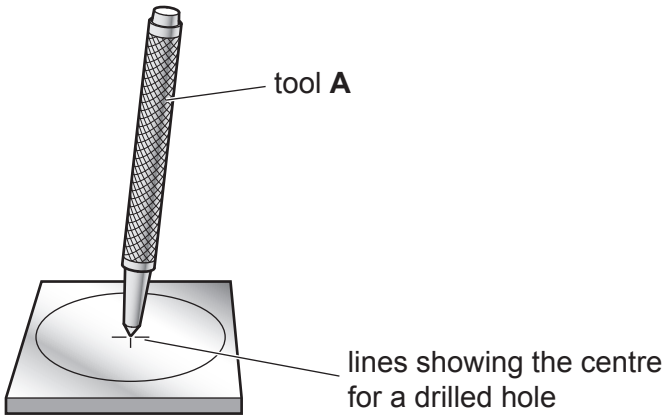

Fig. 6.1

(a) State the name of tool **A**.

..... [1]

(b) State the name of a tool that could be used to mark out the circular shape.

..... [1]

7 Fig. 7.1 shows two pieces of 5 mm thick acrylic that will be joined together.

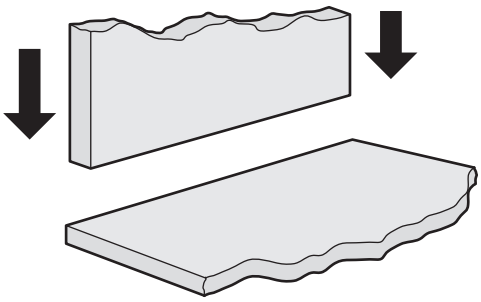

Fig. 7.1

(a) Name a suitable adhesive that could be used to join the acrylic.

..... [1]

(b) Add sketches and notes to Fig. 7.1 to show how excess adhesive could be prevented from spoiling the finished surfaces.

[2]

8 Fig. 8.1 shows two pieces of brass that will be soldered on a brazing hearth using a blow torch.

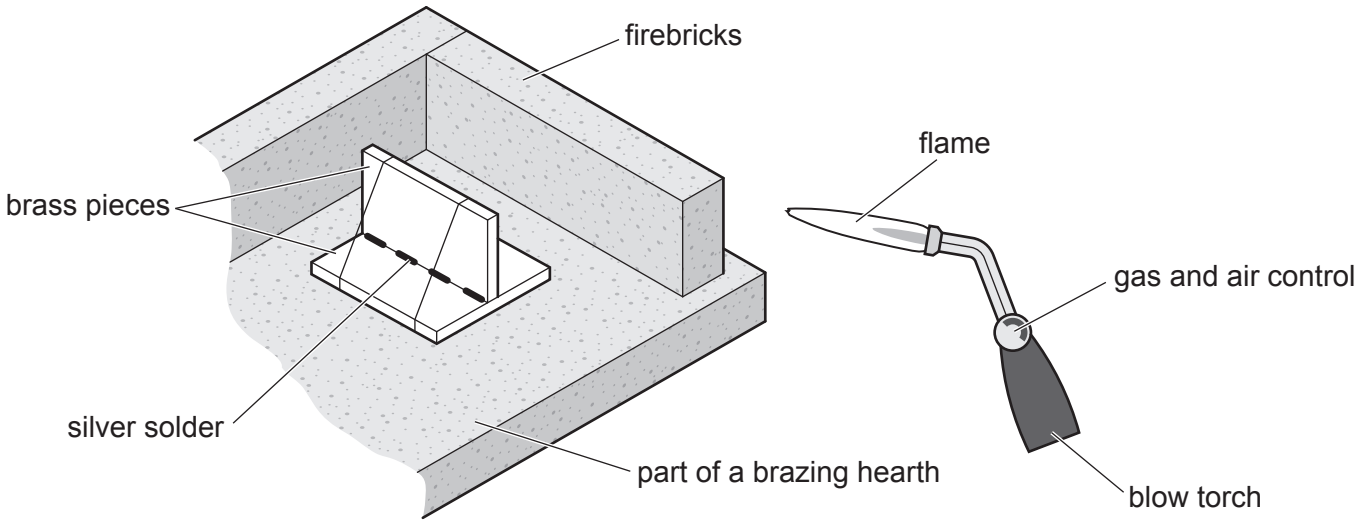

Fig. 8.1

(a) Explain the purpose of the firebricks.

.....

.....

..... [2]

(b) Indicate clearly on Fig. 8.1 the hottest part of the blow torch flame. [1]

9 Complete the sentence below by selecting the correct term from the list.

case harden **change shape** **become softer** **change colour**

When exposed to a change in temperature, thermochromic materials .....

..... [1]

10 Fig. 10.1 shows a basic design for a wall-mounted shelf made from 10 mm thick MDF.

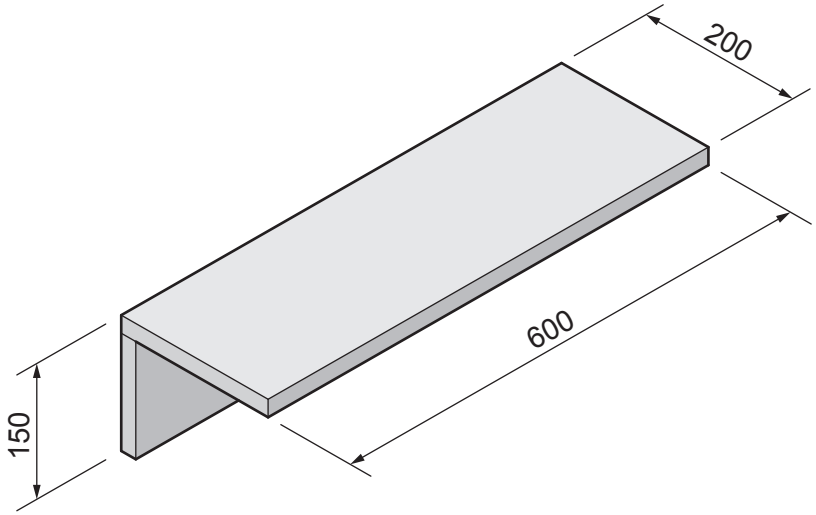

Fig. 10.1

(a) Use sketches and notes to show **one** functional improvement to the wall-mounted shelf.

[2]

(b) Use sketches and notes to show **one** aesthetic improvement to the wall-mounted shelf.

[2]

Section B

Answer **one** question from this section.

11 Fig. 11.1 shows views of an incomplete design for a desktop box easel.
The outer frames of the box and lid are made of 15 mm thick hardwood.
The top of the lid and the base of the box are made from 6 mm thick veneered plywood.

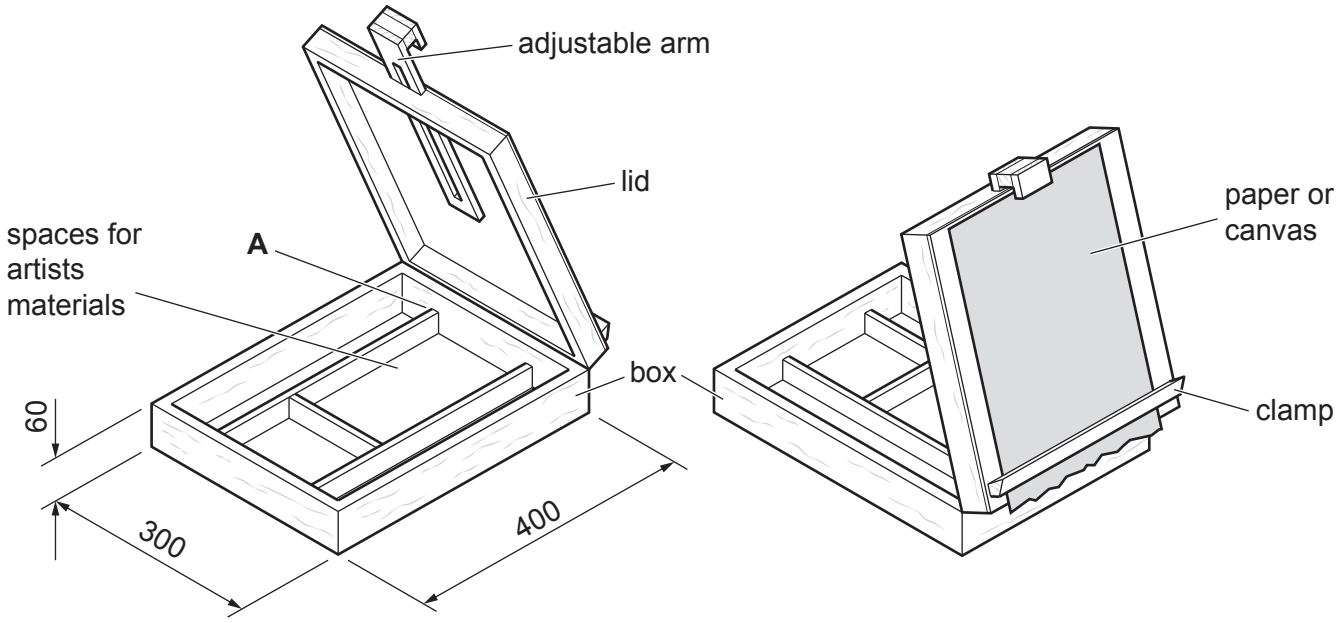

Fig. 11.1

(a) The sides of the box will be joined at each corner by means of finger (comb) joints.
Complete Fig. 11.2 to show an assembled finger (comb) joint.

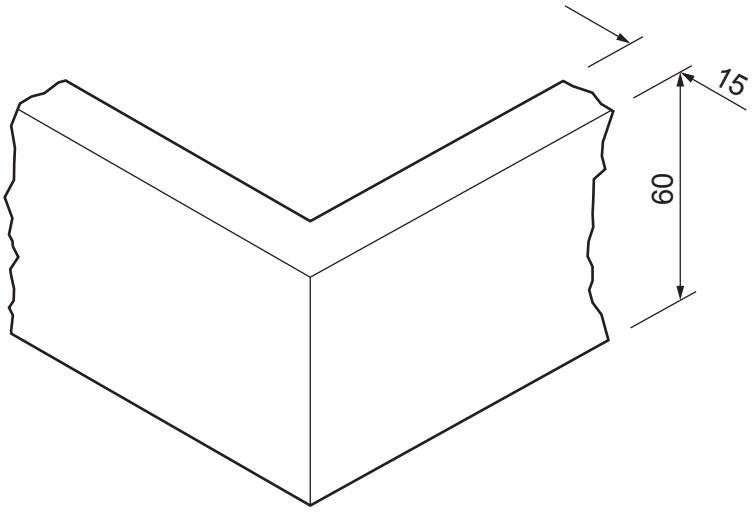

Fig. 11.2

[3]

(b) Fig. 11.3 shows part of the length of hardwood from which the clamp will be made.
The shape has been marked out and the waste will be removed by planing.

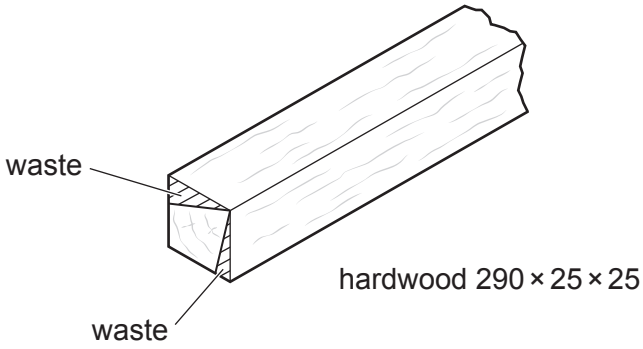

Fig. 11.3

(i) Give **one** advantage of supporting the length of hardwood against a bench stop rather than holding the length of hardwood in a woodworker's vice.

..... [1]

(ii) The clamp holds the paper or canvas in place against the lid.
Use sketches and notes to show how the clamp could be attached to the lid and allow paper or canvas to be removed and replaced.
Give details of any fittings and fixings used.

[4]

(c) Partitions have been added inside the box to provide compartments that could be used to store equipment and materials.
Fig. 11.4 shows part of the sides of the compartment shown at position **A** in Fig. 11.1.

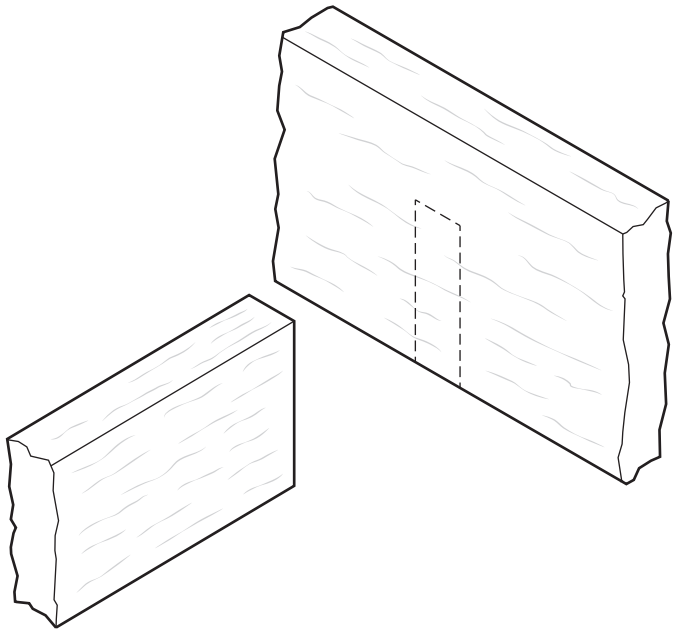

Fig. 11.4

Complete Fig. 11.4 to show a suitable construction that could be used to join the sides at **A**.
[3]

(d) Fig. 11.5 shows the adjustable arm with the slot marked out.

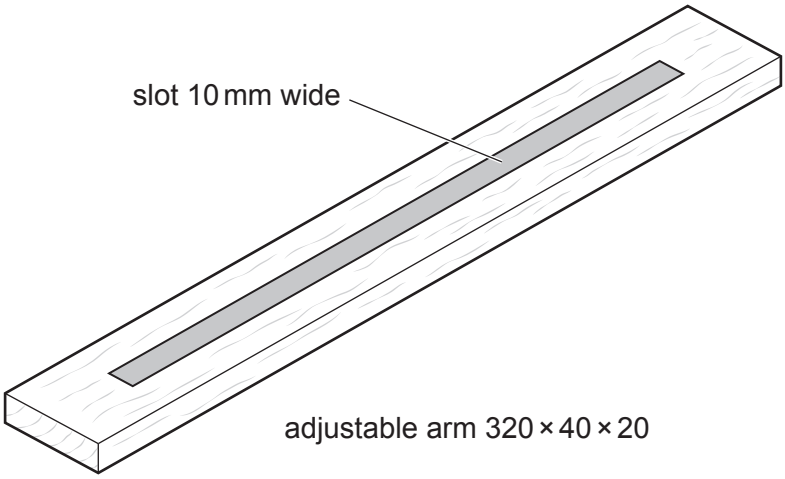

Fig. 11.5

(i) A power router could be used to cut out the slot.
State **two** settings that must be made to the power router before using it to cut out the slot.

1 .....

2 .....
[2]

(ii) A power router may not be available in the school workshop to cut out the slot. An alternative method will need to be used.
Complete Table 11.1 by adding **two** further stages and naming the tools and/or equipment required to cut out the slot.

Table 11.1

Stages	Tools and/or equipment
Drill hole/holes in marked out shape	Drilling machine, twist drill

[4]

(e) Circle from the list below the most suitable hinge that could be used to join the lid to the box.

back flap **tee** **piano** **adjustable** **concealed**

[1]

(f) The lid must be capable of being locked at different angles.

(i) Explain why an angled lid is an example of ergonomic design in the box easel.

.....

.....

..... [2]

(ii) Use sketches and notes to show how the lid could be locked securely at a required angle. Give details of materials, fittings and fixings used.

[5]

12 Fig. 12.1 shows an incomplete design for a tape dispenser made mainly from 1.6 mm thick mild steel sheet. The tape dispenser could be made in a school workshop.

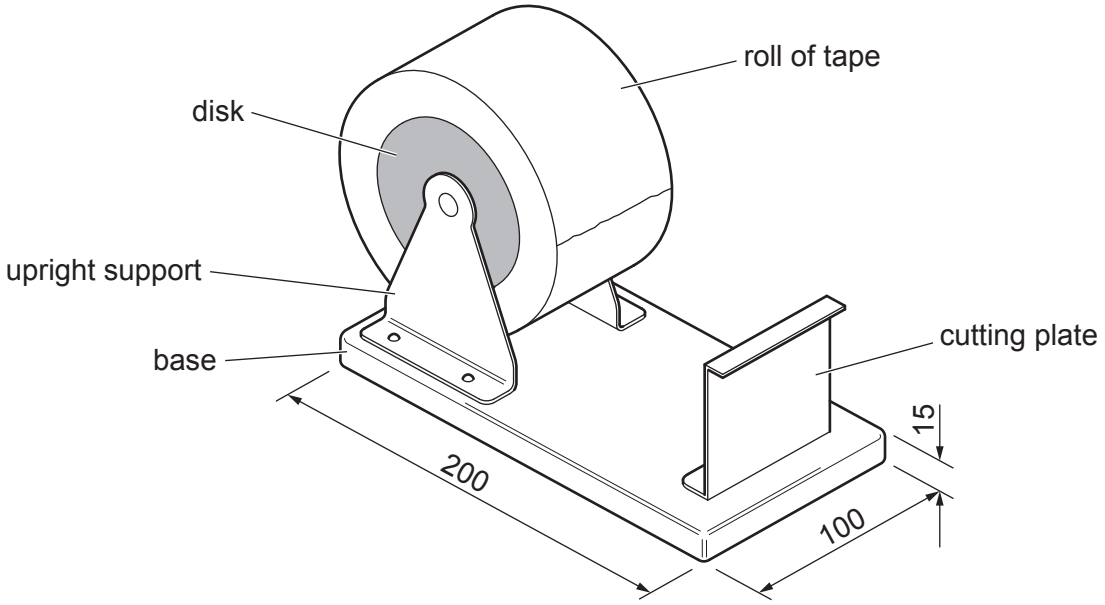

Fig. 12.1

(a) Mild steel is a ferrous metal.

(i) State what is meant by the term 'ferrous metal'.

..... [1]

(ii) Name **one** other ferrous metal.

..... [1]

(b) Fig. 12.2 shows a development (net) of the base of the tape dispenser marked out on 1.6 mm thick mild steel sheet.

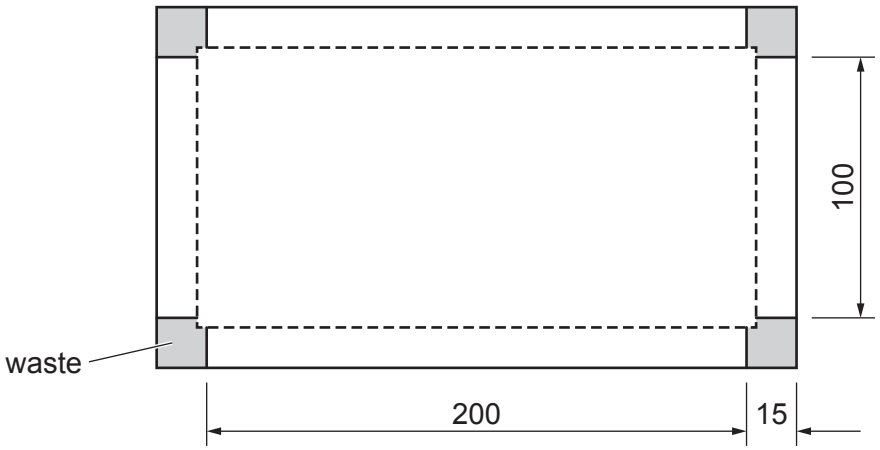

Fig. 12.2

(i) Name **two** tools or items of equipment that could be used to cut out the development (net).

1 .....

2 .....
[2]

(ii) Use sketches and notes to show how a wooden former could be used when bending the development (net) to produce the base.
Name all the tools and equipment used.

[4]

(c) Fig. 12.3 shows the disk onto which the roll of tape fits.
The disk is made of hardwood and will be turned on a woodturning lathe.

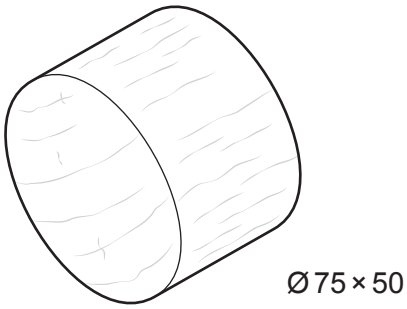

Fig. 12.3

(i) Circle from the list below the best type of grain structure found in hardwoods when used for woodturning.

open grain **interlocking grain** **close grain** **wide grain**

[1]

(ii) Fig. 12.4 shows a length of hardwood set up on a woodturning lathe.

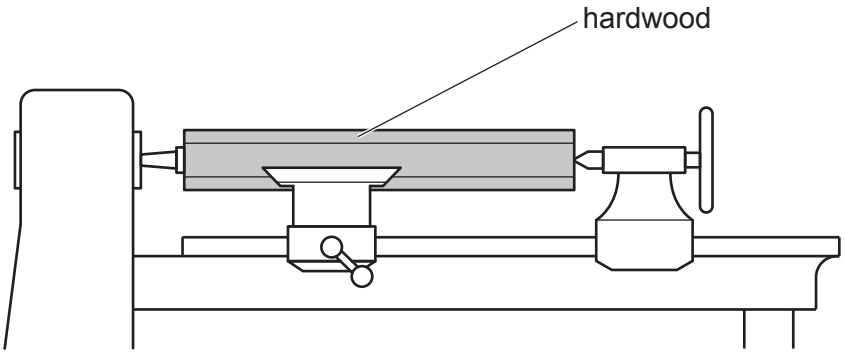

Fig. 12.4

Give **one** safety check that must be carried out before switching on the lathe.

..... [1]

(iii) Name **one** tool that could be used when shaping the disk on the lathe.

..... [1]

(iv) Name **one** tool that could be used to check the diameter of the disk after it has been turned.

..... [1]

(d) Fig. 12.5 shows details of the hardwood disk fastened between the upright supports.
A screw thread is cut on the inside of the Ø10 mild steel tube so that screws can be inserted on both sides of the disk.

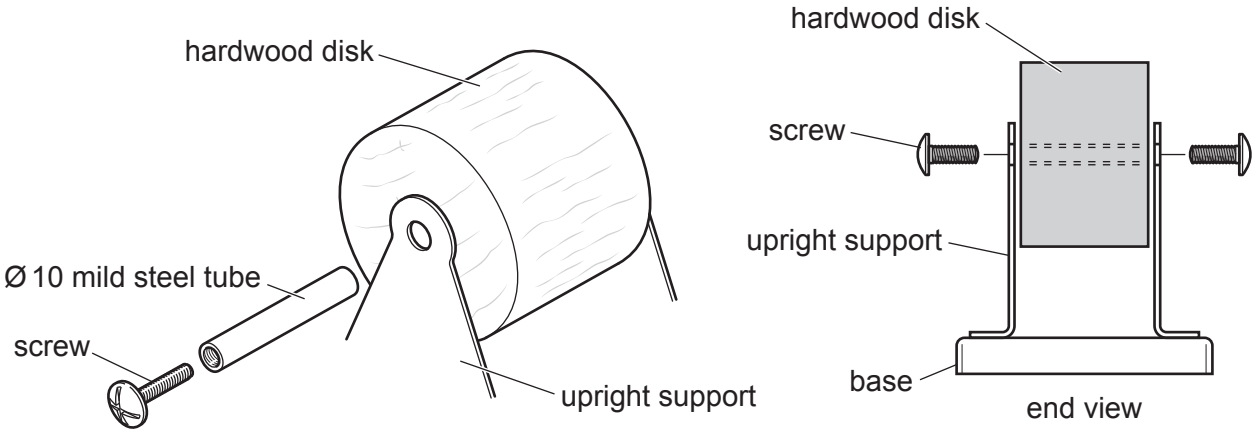

Fig. 12.5

(i) Name a tool that would be used to cut the screw thread on the inside of the mild steel tube.

..... [1]

(ii) Name an adhesive that could be used to glue the mild steel tube inside the hardwood disk.

..... [1]

(e) Fig. 12.6 shows the tape being pulled from the roll.
In design **A** the tape is pulled at an angle over the cutting plate.
It would be easier to cut the tape from the roll if it could be pulled flat over the cutting plate as shown in design **B**.

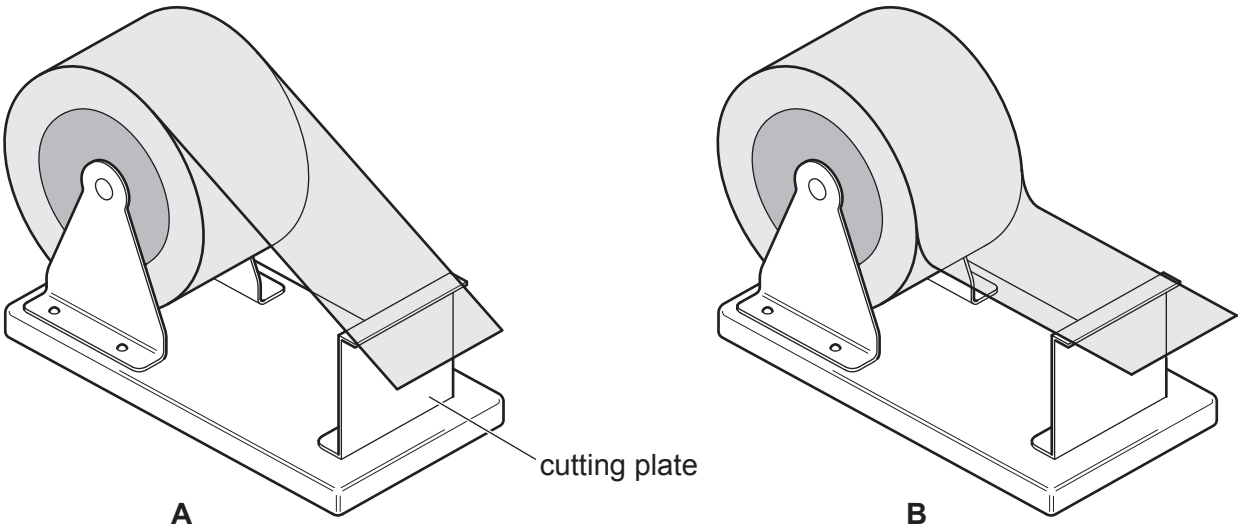

Fig. 12.6

Use sketches and notes to show a modification to the tape dispenser to enable the tape to be cut as shown in design **B**.
State the name of any additional materials used and all constructional details.

[5]

(f) The mild steel parts of the tape dispenser will be given a dip coated finish.
Complete Table 12.1 by adding **three** further stages in the dip coating process.

Table 12.1

Stage	Process
1	Remove grease and dirt from surfaces of mild steel parts
2	
3	
4	

[3]

(g) Use sketches and notes to show a modification to the tape dispenser so that it could be fixed securely to a workbench.
State the names of any fittings and fixings used.

[3]

13 Fig. 13.1 shows views of a design for a novelty photograph holder made of 4 mm thick acrylic in the shape of a t-shirt. The t-shirt has a coat hanger suspended from a metal rail.
Two photographs can be 'sandwiched' between the two acrylic frames.

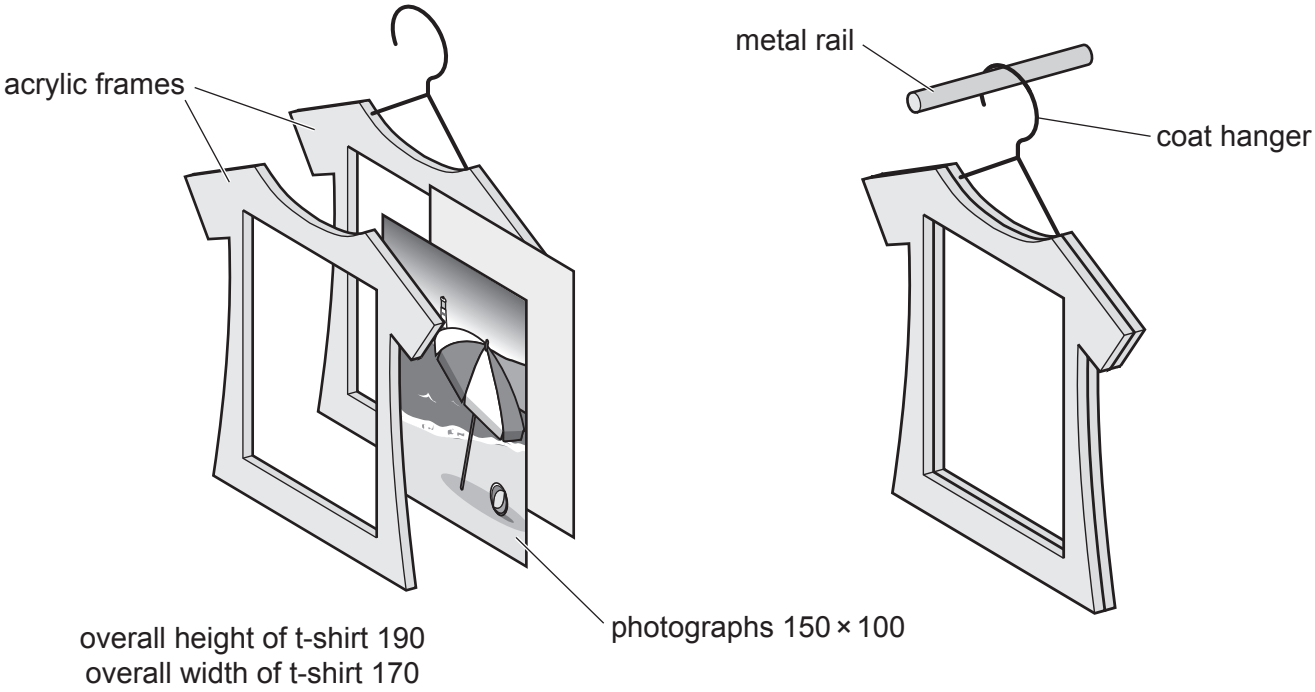

Fig. 13.1

(a) Fig. 13.2 shows a paper template glued onto 4 mm thick acrylic sheet.

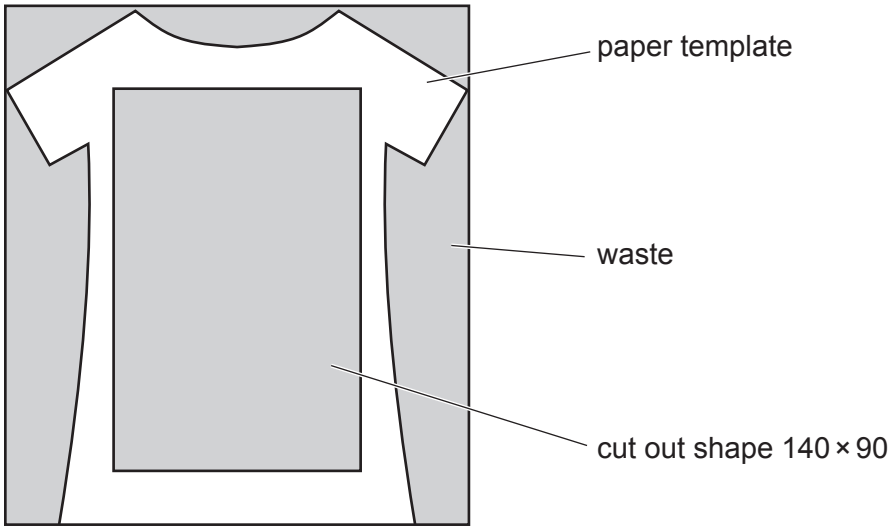

Fig. 13.2

(i) Give **two** advantages of using a paper template rather than drawing the shape directly onto the acrylic sheet.

1 .....

2 .....
[2]

(ii) The cut out shape will be produced using hand and machine tools.
Complete Table 13.1 by stating the correct names for the tools and/or equipment used to produce the cut out shape.

Table 13.1

Stage	Process	Tools and/or equipment
1	Make a hole in corner of shape to be cut out	
2	Cut out shape leaving small amount of waste to be removed later	
3	Remove waste up to the line of the final shape	
4	Smooth edges to a high quality finish	

[4]

(iii) Two identical acrylic frames are required to make the photograph holder.
Describe how **two** identical acrylic frames could be produced by hand.

.....

.....

.....

[2]

(b) The acrylic frames could be produced by means of CAD/CAM.
Fig. 13.3 shows a screen shot of a CAD drawing of part of one acrylic frame.

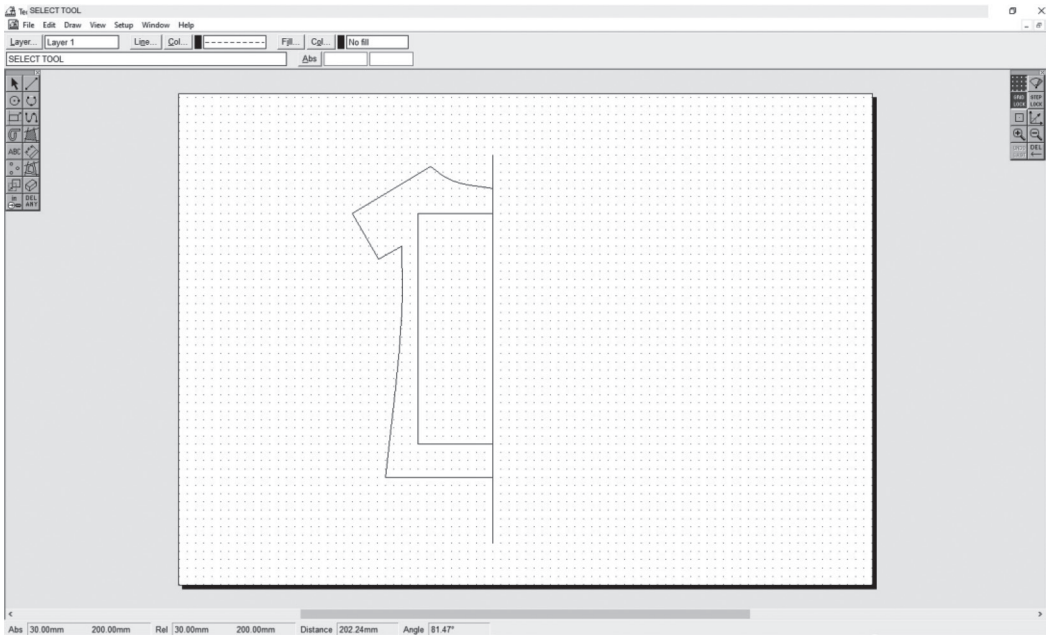

Fig. 13.3

(i) Explain why the designer has drawn only half of the shape of the acrylic frame.

.....

.....

..... [2]

(ii) Fig. 13.4 shows a screenshot of one complete acrylic frame.

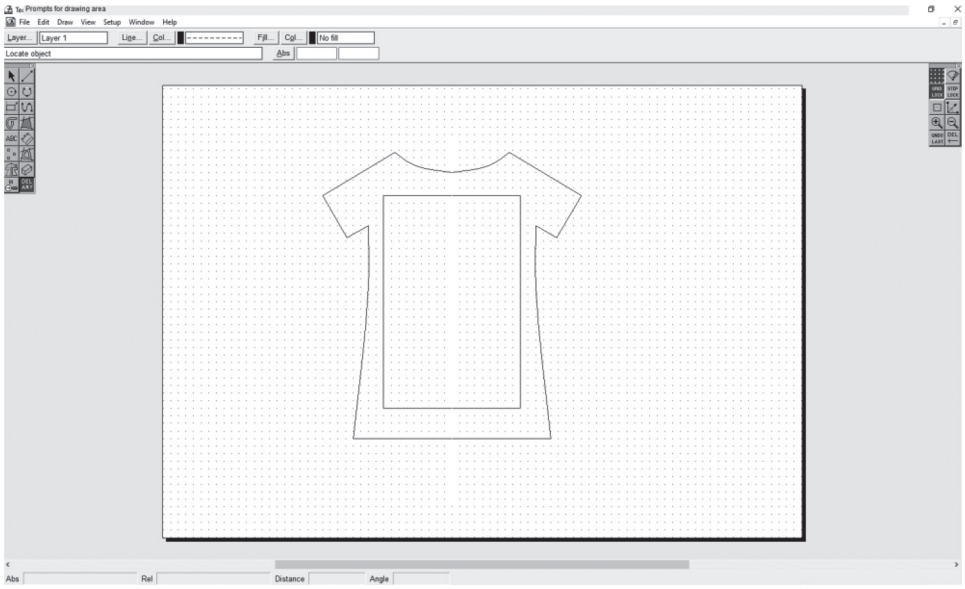

Fig. 13.4

Complete Table 13.2 by stating **three** additional actions required to produce the acrylic frame using CAM.

Table 13.2

Stage	Action to be taken
1	Download acrylic frame file data to CAM machine
2	
3	
4	

[3]

(c) Use sketches and notes to show a method of holding the two acrylic frames together so that the photographs are held securely in place.
The method must allow the photographs to be changed without the aid of tools.
Include the following details:

- named materials
- methods of construction
- **two** important sizes.

[6]

(d) Fig. 13.5 shows the coat hanger suspended from a metal rail.
A stand is required to support the metal rail and allow **four** photograph holders to be suspended.

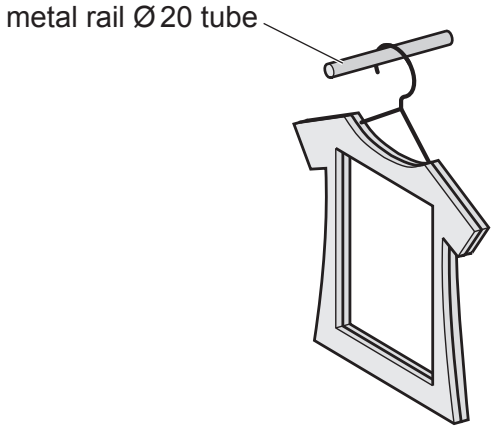

Fig. 13.5

Use sketches and notes to show a design for such a stand.
Include the following details:

- named materials
- methods of construction
- **two** important sizes.

[6]

BLANK PAGE

BLANK PAGE

BLANK PAGE

Permission to reproduce items where third-party owned material protected by copyright is included has been sought and cleared where possible. Every reasonable effort has been made by the publisher (UCLES) to trace copyright holders, but if any items requiring clearance have unwittingly been included, the publisher will be pleased to make amends at the earliest possible opportunity.

To avoid the issue of disclosure of answer-related information to candidates, all copyright acknowledgements are reproduced online in the Cambridge Assessment International Education Copyright Acknowledgements Booklet. This is produced for each series of examinations and is freely available to download at www.cambridgeinternational.org after the live examination series.

Cambridge Assessment International Education is part of Cambridge Assessment. Cambridge Assessment is the brand name of the University of Cambridge Local Examinations Syndicate (UCLES), which is a department of the University of Cambridge.

© UCLES 2023